ETM421S

Perilex rewirable plug with side (angled) cable entry, 16 A

PRODUCT DATASHEET • PERILEX 16 A RANGE • ENGLISH

Technical data

Rating	16 A / 400/230 V~, 50 Hz, 3P + N + PE, Class I
Termination / configuration	Pillar terminals for all wire types, 1.5–2.5 mm²; brass pins
Material & ingress protection	Halogen-free PC, glow-wire 650/850 °C (IEC 60695-2-11), IP20
Installation reference	Lateral (side) cable entry; body 44 × 96.5 × 68 mm
Temperature & standards	Operating: -25 to +60 °C; Install: -5 to +25 °C · IEC 60884-1, SS 428 08 34, VDE 0620

Dimensional drawing

Dimensional drawing from 2026 Product Catalogue (p. 357). Dimensions in mm.

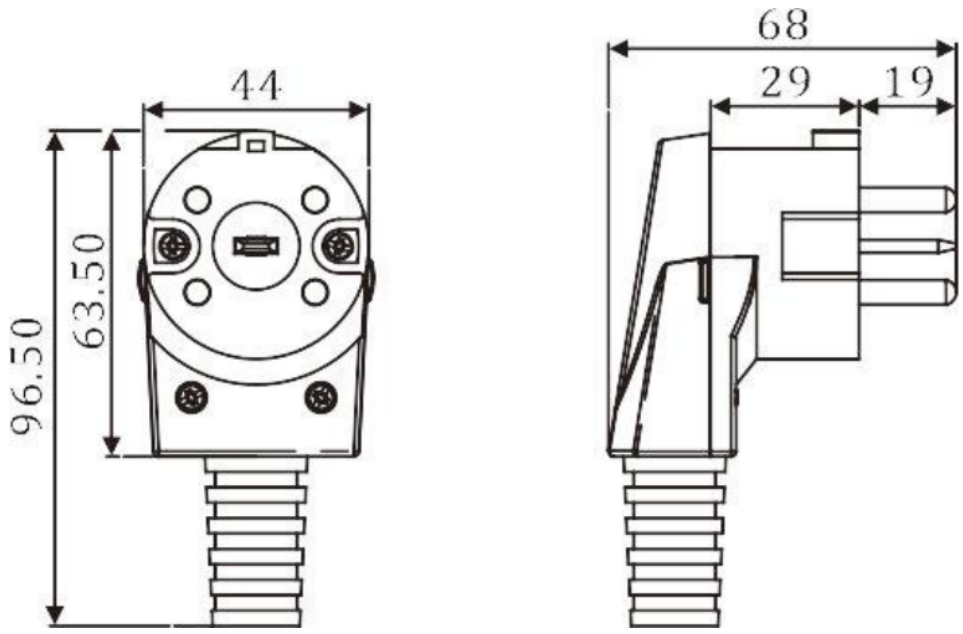

Documentation & compliance notes

Specification & drawing source: Glob-el 2026 Product Catalogue (pp. 355–357).

Product safety certification: Intertek Semko AB Ref. SE-S-2201015 (IEC 60884-1, SS 428 08 34 sheet IX, DIN VDE 0620).

Need controlled 2D/STEP drawings, Semko certificate copy or samples for ETM421S?
Click here to request in 10 seconds -> glob-el-box.com/request-a-quote/?product=ETM421S&request=documents&src=pdf