ETM420P

Perilex flush-mounted socket-outlet, 16 A

PRODUCT DATASHEET • PERILEX 16 A RANGE • ENGLISH

Technical data

Rating	16 A / 400/230 V~, 50 Hz, 3P + N + PE, Class I
Termination / configuration	Pozidriv screw terminals, 1.5–2.5 mm²; flush-mounted rewirable socket
Material & ingress protection	Halogen-free PC, glow-wire 650/850 °C (IEC 60695-2-11), IP20
Installation reference	Cover plate 92 × 92 mm; fixing c-c 67 mm; projection 12 mm, depth 49.5 mm
Temperature & standards	Operating: -25 to +60 °C · IEC 60884-1, SS 428 08 34 sheet VIII

Dimensional drawing

Dimensional drawing from 2026 Product Catalogue (p. 356). Dimensions in mm.

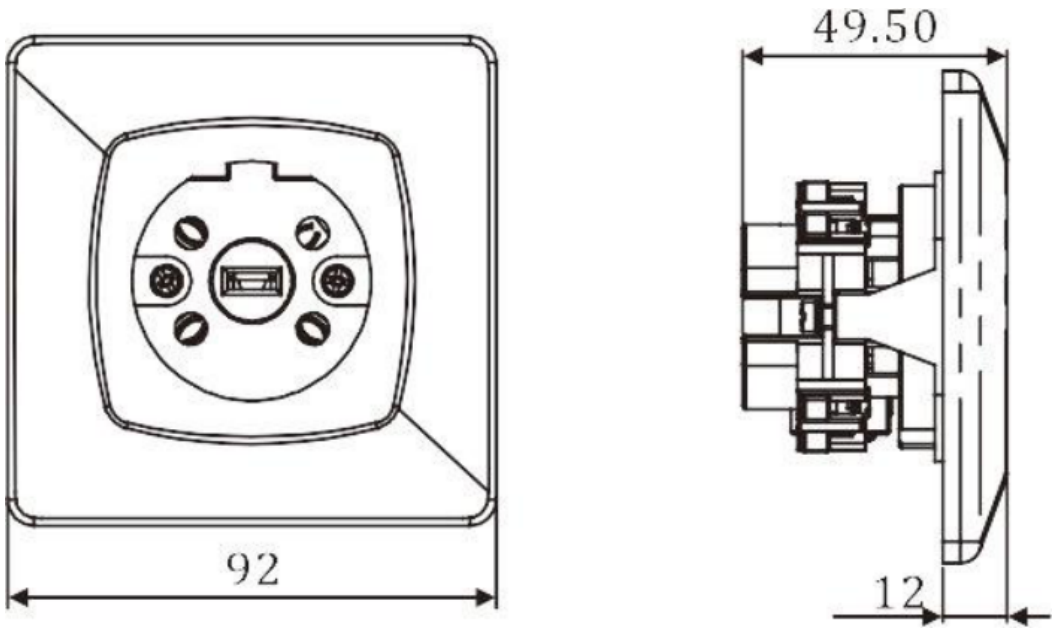

Documentation & compliance notes

Specification & drawing source: Glob-el 2026 Product Catalogue (pp. 355–356).

Product safety certification: Intertek Semko AB Ref. SE-S-2200808R1 (IEC 60884-1, SS 428 08 34 sheet VIII, valid until 28 Jun 2027).

Need controlled 2D/STEP drawings, Semko certificate copy or samples for ETM420P?
Click here to request in 10 seconds -> glob-el-box.com/request-a-quote/?product=ETM420P&request=documents&src=pdf