ETM277S

Moulded Perilex 16 A plug with 5-core cord set

PRODUCT DATASHEET • PERILEX 16 A RANGE • ENGLISH

Technical data

Rating	16 A / 400/230 V~, 50 Hz, 3P + N + PE (non-rewirable moulded PVC plug)
Termination / configuration	5-core cord: H05VV-F, H05V2V2-F, H05RR-F or H07RN-F (5G1.5 / 5G2.5 mm²)
Material & ingress protection	Moulded PVC plug enclosure, glow-wire 650/850 °C (IEC 60695-2-11), IP20
Installation reference	Moulded plug head: 44 × 75.5 × 66 mm; specify cord variant & length on order
Temperature & standards	Operating: -25 to +60 °C; Install: -5 to +25 °C · IEC 60884-1:2022, NEN 1020-1:2024

Dimensional drawing

Dimensional drawing from 2026 Product Catalogue (p. 358). Dimensions in mm.

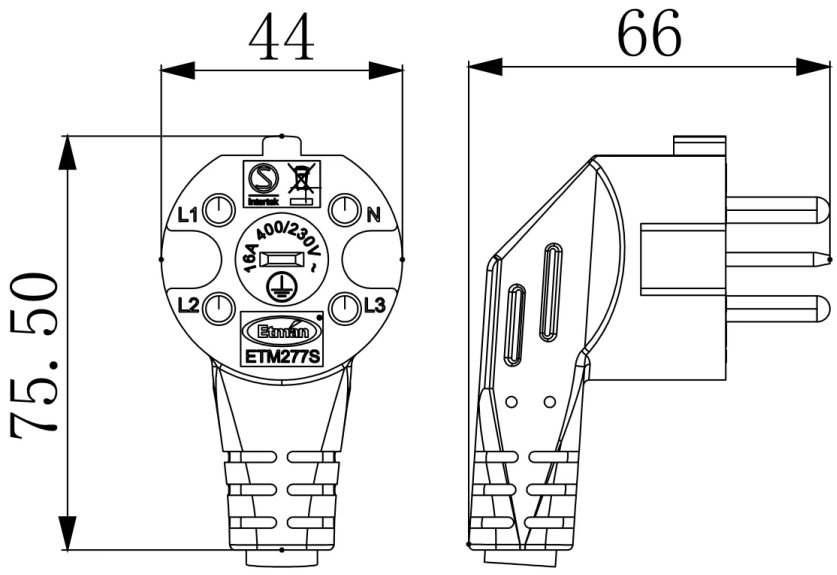

Documentation & compliance notes

Specification & drawing source: Glob-el 2026 Product Catalogue (pp. 355–358).

Product safety certification: Intertek Semko AB Ref. SE-S-2600782 (IEC 60884-1:2022, NEN 1020-1:2024 sheet IX).

Need controlled 2D/STEP drawings, Semko certificate copy or samples for ETM277S?
Click here to request in 10 seconds -> glob-el-box.com/request-a-quote/?product=ETM277S&request=documents&src=pdf